NOTES
■ IN COMPLIANCE WITH UNIFORM PLUMBING CODE (UPC), INTERNATIONAL PLUMBING CODE (IPC), AND STRUCTURAL LOADING REQUIREMENTS OF ASTM INTERNATIONAL C1227.
■ MINIMUM ONE (1) ACCESS OPENING PER COMPARTMENT REQUIRED (AS SHOWN). ADDITIONAL ACCESS CAN BE ADDED IN LIEU OF PLUG COVER WHEN REQUIRED BY THE AUTHORITY HAVING JURISDICITON.
■ MUST BE INSTALLED PER "JENSEN PRECAST UNDERGROUND WASTEWATER PRECAST CONCRETE TANK INSTALLATION PROCEDURE" WHICH CAN BE FOUND AT https://www.jensenprecast.com/Tank-Installation-Procedure-d2106.pdf. THIS PROCEDURE ADDRESSES REQUIRED EXCAVATION, SITE PREPARATION, INSTALLATION, VENTILATION, AND WATER/VACCUM TESTING

BILL OF MATERIALS

ITEM	QTY	PART NUMBER	DESCRIPTION
1	1	200064676	Tank JOP 4000-5000 Gallon x 8 Slab Top 24"E, 24"B, 24"E
2	1	200080556	Tank JOP 4000 Gallon 4 Inch Assembly Septic Single Baffle
3	4.000 ul	100013648	SEALANT JOINT BUTYL RUBBER ASTM C-990 AND M198 CS-102 1IN EQUIV X14.5FT PER ROLL
4	JOB SPECIFIC	100005850	CI RINGCOVER 24DIA B-5105-02/B-5105-R2 ASTM A48 CL35B CP O-RING GASKET OSI JENSEN/INTERCEPT
5	JOB SPECIFIC	100001524	Grade Ring D2432x3
6	JOB SPECIFIC	100001525	Grade Ring D2432x6
7	JOB SPECIFIC	100001526	Grade Ring D2432x12
8	JOB SPECIFIC	100012046	Plug Cover D2428x6 Slab Top

200093311.idw

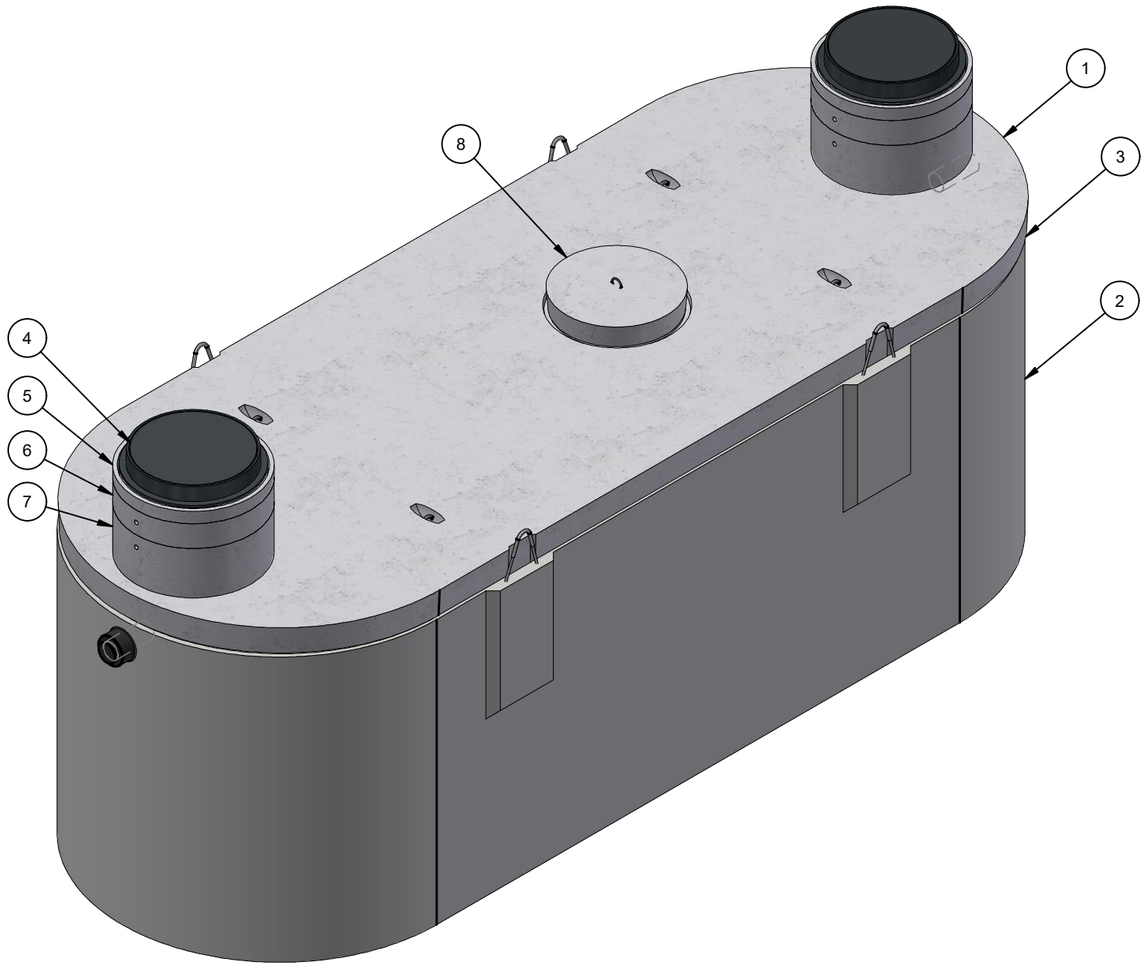

ISO VIEW

MODEL: JOP-4000-EBE-ST

CHANGE HISTORY			
NO.	DESCRIPTION	DATE	BY
1	2311-56180	11/30/23	MGL

BURY DEPTH:	1.1' - 5.0' to Top		
WATER LEVEL:	Below Structure	APPROX. WEIGHT:	38987.87 Lbs
DESIGN SPEC:	ACI 318,ASTM C890	LOADING SPEC:	A-16 (AASHTO HS20-44)
AGENCY:		AGENCY SPEC:	

JENSEN PRECAST EST. 1968

WWW.JENSENPRECAST.COM

©2024 Jensen Precast- All rights reserved.
All materials appearing as Jensen Precast documents and the like are proprietary work product and are protected under U.S. copyright and other laws.
Unless in conjunction with business conducted with Jensen Precast, any use of Jensen Precast work product without express, written consent is prohibited, and recipient is prohibited from distributing any and all work product to non-approved third parties under penalty of civil action.

DESCRIPTION:	Tank JOP 4000 Gallon 4 Inch Layout Septic 24"E, 24"B, 24"E Single Baffle LAYOUT REVIEW		REV: A-3
PART NUMBER:	200080567	DRAWN BY:	M. Lincoln
CREATED:	6/7/2023	MODIFIED:	1/8/2024
			SHEET: 1 OF 2

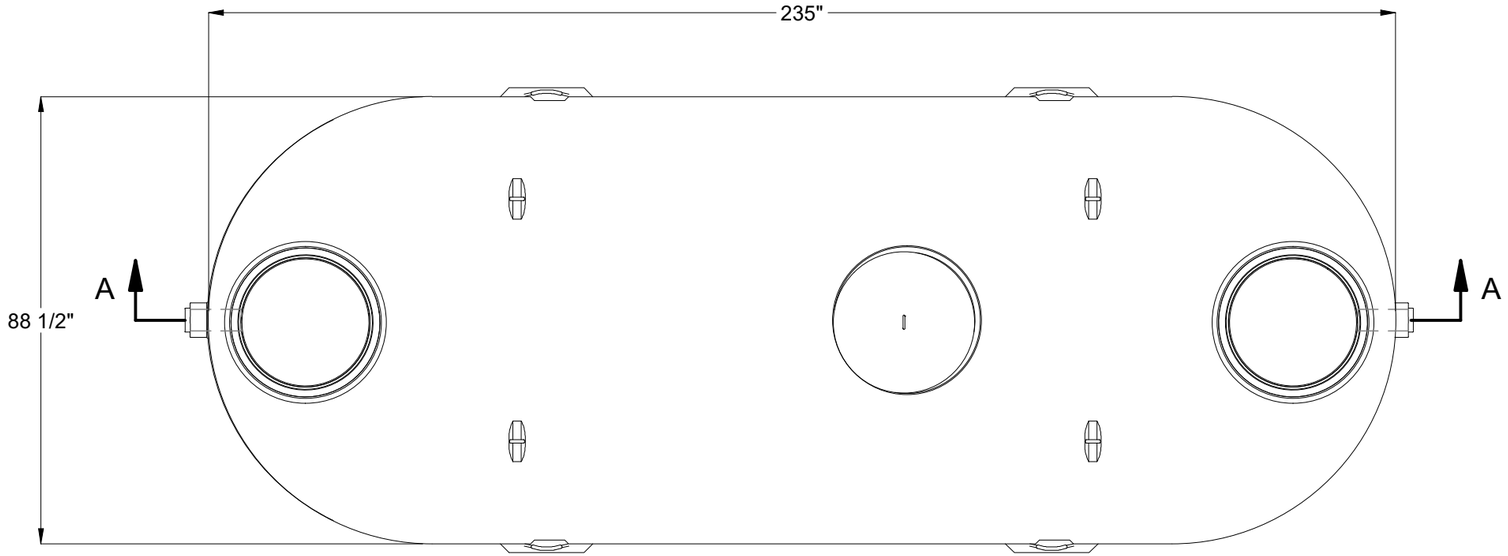

PLAN VIEW

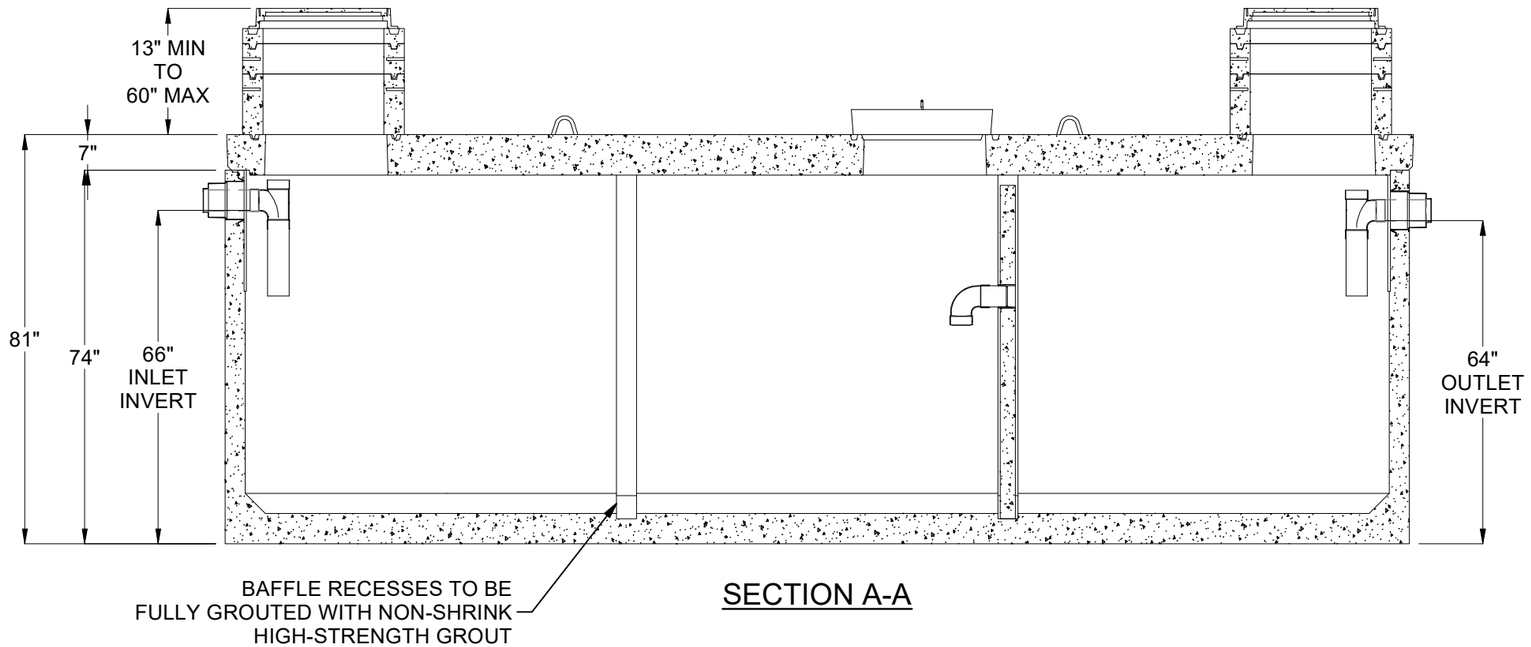

SECTION A-A

BURY DEPTH:	1.1' - 5.0' to Top		
WATER LEVEL:	Below Structure	APPROX. WEIGHT:	38987.87 Lbs
DESIGN SPEC:	ACI 318,ASTM C890	LOADING SPEC:	A-16 (AASHTO HS20-44)
AGENCY:		AGENCY SPEC:	

JENSEN PRECAST EST. 1968

WWW.JENSENPRECAST.COM

©2024 Jensen Precast- All rights reserved.
All materials appearing as Jensen Precast documents and the like are proprietary work product and are protected under U.S. copyright and other laws.
Unless in conjunction with business conducted with Jensen Precast, any use of Jensen Precast work product without express, written consent is prohibited, and recipient is prohibited from distributing any and all work product to non-approved third parties under penalty of civil action.

DESCRIPTION:
Tank JOP 4000 Gallon 4 Inch Layout Septic 24"E, 24"B, 24"E Single Baffle
LAYOUT DRAWING

PART NUMBER:	200080567	DRAWN BY:	M. Lincoln
CREATED:	6/7/2023	MODIFIED:	1/8/2024

REV: A-3

SHEET: 2 OF 2

200093311.idw